PART CODE :

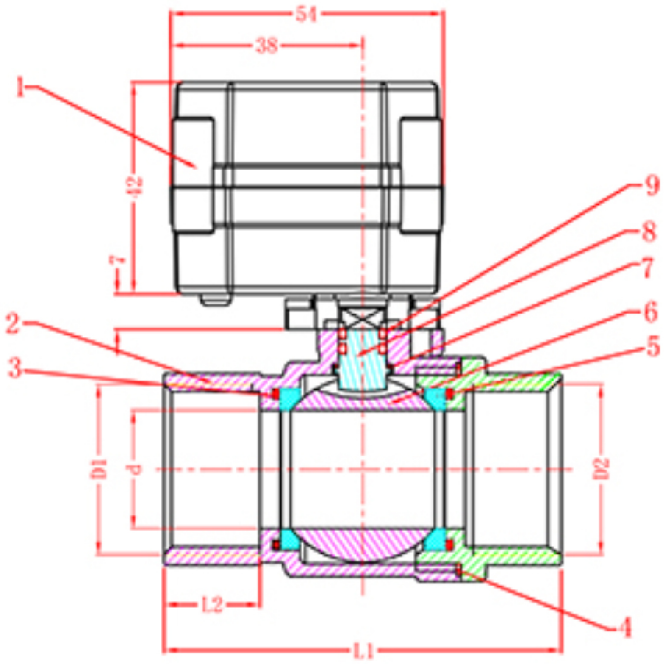

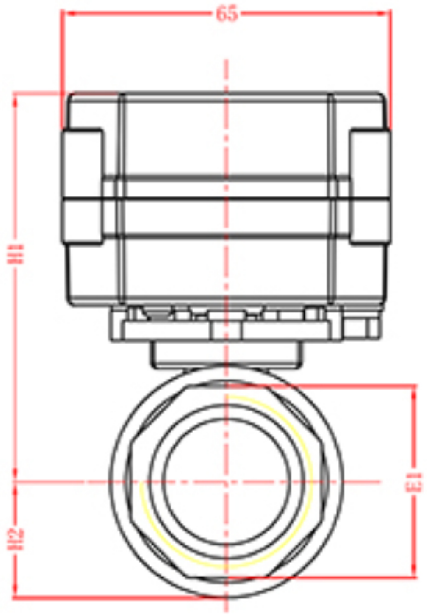

No.	Name	Material	Specification	Quantity	
9	O-ring	FKM		2	
8	Stem	Stainless Steel	304	1	
7	Gasket	PTFE		1	
6	Ball	Stainless Steel	304	1	
5	Sealing	PTFE		2	
4	Sealing	PTFE		1	
3	O-ring	FKM		2	
2	Body Cover	Stainless Steel	304	1	
1	Actuator	PPO		1	

Description		d	L1	L2	E1	H1	H2
25-S2-A	1"	25	81	18	38	82	24.5
20-S2-A	3/4"	20	72	17	31	74	20
15-S2-A	1/2"	15	62	14	25	70	17
10-S2-A	3/8"	10	51	12	21	70	14
8 -S2-A	1/4"	8	51	12	21	70	14

MATERIAL		DRN & DATE 2019/10/29	TITLE A20 Electric valve	MODEL NO
QTY/SET				
FINISH		CHK & DATE		
TREATMENT				
COLOUR		APPD & DATE		
UNIT	MM			
		SCALE		SHEET NO
			DRG NO/PDD REF NO	ISSUE